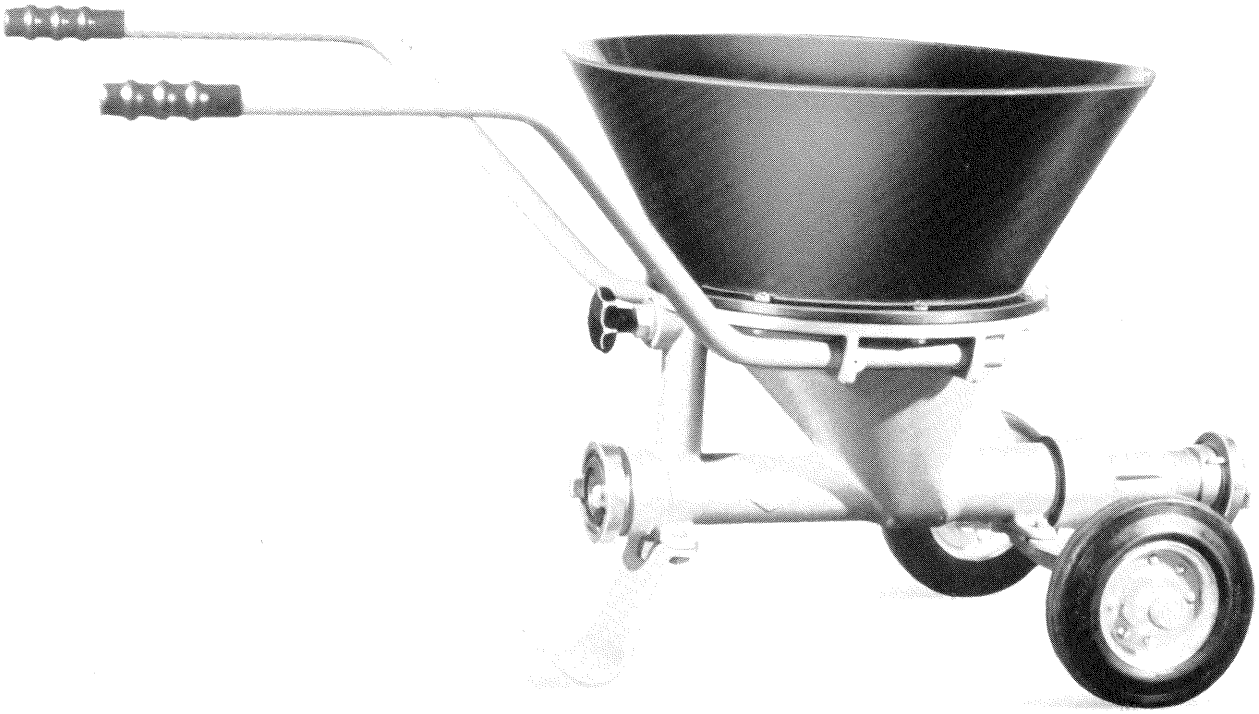

R 8201-8

Liquid Jet – Solids Ejector mobile

Liquid Jet - Solids Ejector Mobile

General

The mobile liquid jet - solids ejector serves for conveying of solids in granular or dust form (maximum grain diameter 8 mm). The delivered material is mixed with the motive water and is pumped by simultaneous adding of mixing or rinsing water. The new development of tangential injection of the rinsing water minimises water consumption.

Ranges of Application:

Mobile liquid jet - solids ejectors are used for filling, cleaning and discharging of water treatment plants, for conveying gravel, sand and salts as well as granular slag and ash in ash-removal plants, etc.

Construction:

The principal component part of the solids ejector is the ejector casing made of spheroidal graphite iron in which the connection for the rinsing liquid is integrated. All parts are mounted on or in this casing.

Materials:

- Jet ejector casing made of GGG-40 (S.G.Iron)
- Removable mixing zone made of GGG-40
- Motive and rinsing water nozzle made of G-SnBz 10 (Cast Bronze)
- Hopper made of PE
- Handle bars made of hot-galvanized steel tube
- Connecting hose couplings made of special brass

Alternatively a mixing zone made of ceramic oxide can be supplied against an extra cost. The high chemical and mechanical resistance of the ceramic oxide increases considerably the service life.

Connections:

The mobile liquid jet - solids ejector is equipped with tight coupling, form C or form B according to DIN 86204 or DIN 86205 resp. The following connections can be supplied:

	Motive Side	Mixed-flow Side
- standard type:	form C	form C
alternatively:	2" BSP(R2") (internal)	2" BSP (R2") (external)
- special design:	form C	form B
alternatively:	2" BSP (internal)	2-1/2" BSP (external)

Dimensions:

The external dimensions can be noted from the technical data sheet TD 18401 or from the graph on the reverse.

Spare Parts:

All parts can be supplied as spare parts. Due to normal wear and tear it is recommended to keep motive nozzle and mixing zone in stock. Where high abrasion or erosion is expected, we recommend the ceramic oxide mixing zone.

Motive Fluid:

usually water.

Capacity:

Determining factors for the design of the jet ejectors are the quantity of solids, the density and the maximum grain size together with discharge and motive pressures. Performance data for standard types can be noted from the following tables. The density of the solids has been assumed as 2 kg/dm^3.

Prices:

according to current price list.

Performance Data for Standard Types (Special Designs on Request)

p_d (abs)	$\dot{m}_{sf}$	$\dot{V}_{ss}$	$\dot{V}_{tr}$	p_{tr} (abs)
bar	10^3kg/h	m^3/h	m^3/h	bar
1.5	3.9	1.2	13.1	2.5
	5.8	1.8	15.5	3.0
	7.4	2.3	17.7	3.5
	8.5	2.6	19.4	4.0
	9.3	2.9	21.1	4.5
1.6	5.0	1.5	15.2	3.0
	6.7	2.1	17.5	3.5
	8.1	2.5	19.3	4.0
	9.1	2.8	21.0	4.5
	9.9	3.0	22.4	5.0
	10.5	3.2	23.8	5.5
1.7	4.0	1.3	15.0	3.0
	6.0	1.9	17.3	3.5
	7.4	2.3	19.1	4.0
	8.7	2.7	20.9	4.5
	9.6	2.9	22.3	5.0
	10.4	3.2	23.8	5.5
1.8	5.3	1.6	17.0	3.5
	6.7	2.1	18.9	4.0
	8.1	2.5	20.7	4.5
	9.3	2.9	22.3	5.0
	10.0	3.0	23.6	5.5
	10.9	3.3	25.0	6.0
	11.7	3.6	26.4	6.5
1.9	4.3	1.3	16.7	3.5
	6.1	1.9	18.7	4.0
	7.6	2.3	20.5	4.5
	8.6	2.6	22.0	5.0
	9.9	3.0	23.6	5.5
	10.6	3.2	24.9	6.0
	11.3	3.4	26.2	6.5
	12.1	3.7	27.5	7.0
	12.6	3.8	28.6	7.5
2.0	3.4	1.1	16.5	3.5
	5.5	1.7	18.5	4.0
	7.0	2.2	20.4	4.5
	8.3	2.5	21.9	5.0
	9.3	2.8	23.4	5.5
	10.3	3.2	24.9	6.0
	11.0	3.4	26.2	6.5
	11.9	3.6	27.4	7.0
	12.5	3.8	28.6	7.5
2.1	4.5	1.4	18.2	4.0
	6.3	2.0	20.2	4.5
	7.7	2.4	21.8	5.0
	8.9	2.7	23.3	5.5
	9.8	3.0	24.7	6.0
	10.8	3.3	26.1	6.5
	11.6	3.5	27.3	7.0
	12.2	3.7	28.5	7.5

p_d (abs)	$\dot{m}_{sf}$	$\dot{V}_{ss}$	$\dot{V}_{tr}$	p_{tr} (abs)
bar	10^3kg/h	m^3/h	m^3/h	bar
2.2	3.6	1.1	17.9	4.0
	5.5	1.7	19.9	4.5
	7.1	2.2	21.6	5.0
	8.3	2.5	23.1	5.5
	9.5	2.9	24.6	6.0
	10.3	3.1	25.9	6.5
	11.4	3.5	27.3	7.0
	12.0	3.7	28.5	7.5
2.3	4.6	1.5	19.7	4.5
	6.5	2.0	21.4	5.0
	7.8	2.4	23.0	5.5
	8.9	2,7	24.4	6.0
	10.0	3.1	25.9	6.5
	10.8	3.3	27.1	7.0
	11.8	3.6	28.4	7.5
2.4	4.0	1.3	19.5	4.5
	5.8	1.8	21.2	5.0
	7.3	2.2	22.8	5.5
	8.5	2.6	24.3	6.0
	9.5	2.9	25.7	6.5
	10.6	3.2	27.0	7.0
	11.4	3.5	28.3	7.5
2.5	5.0	1.6	21.0	5.0
	6.7	2.1	22.7	5.5
	8.0	2.4	24.1	6.0
	9.2	2.8	25.6	6.5
	10.1	3.1	26.9	7.0
	11.0	3.4	28.2	7.5
2.6	3.7	1.2	20.6	5.0
	6.0	1.8	22.4	5.5
	7.5	2.3	24.0	6.0
	8.6	2.6	25.4	6.5
	9.7	3.0	26.8	7.0
	10.6	3.2	28.0	7.5

p_d = discharge pressure measured just at the outlet nozzle of mixed flow.

$\dot{m}_{sf}$ = solid matter content of the suction flow. The suction flow consists of the solid matter content and the rinsing liquid flow.

$\dot{V}_{ss}$ = rinsing liquid flow; it is led into the hopper through the rinsing nozzle.

$\dot{V}_{tr}$ = motive water flow including rinsing liquid flow.

p_{tr} = motive pressure measured just at the motive nozzle.

Körting Hannover AG

Badenstedter Str. 56
D-30453 Hannover
Telefon: ++ 49 (511) 21 29-0
Telefax: ++ 49 (511) 21 29-2 23
E-Mail: s@koerting-hannover-ag.com

LIQUID JET - SOLIDS EJECTOR MOBILE

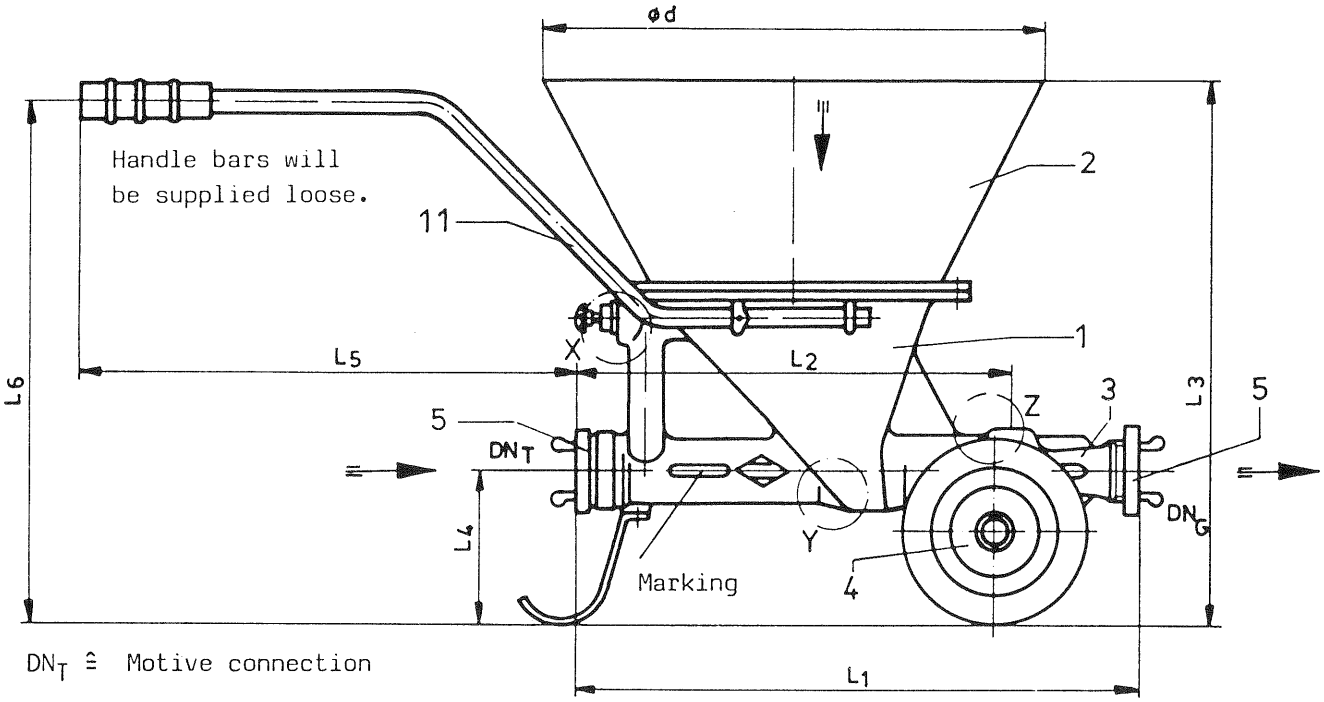

DN_T ≙ Motive connection

DN_G ≙ Mixed-flow connection

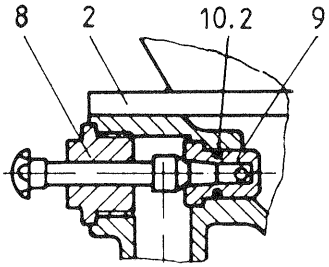

Detail "X"

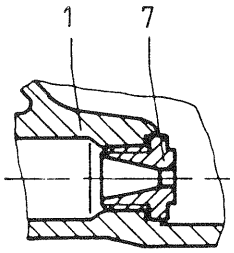

Detail "Y"

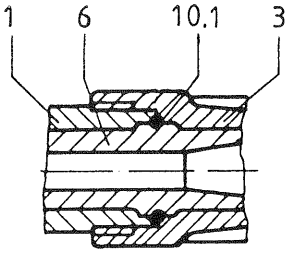

Detail "Z"

Item	Designation	Material (DIN)	Remarks
1	Casing	GGG-40	
2	Hopper	PE	
3	Diffuser	GGG-40	
4	Wheel set	St/solid-rubber tire	
5	Hose-tight coupling	SoMs	
6	Mixing zone	GGG-40	alternatively of ceramic oxide
7	Motive nozzle	2.1052	
8	Valve head	Ms	
9	Nozzle	2.1052	
10	O-ring	Buna-N	
11	Handle bars	St vzn.	

Requisition no.	hose - tight coupling		structural dimensions							wheel track	type no. of O-ring		weight/kg
	DNT	DNG	L1	L2	L3	L4	L5	L6	ϕd		10.1	10.2	
18401 473140	C DIN 86204	C DIN 86204	630	482	570	164	570	550	554	500	328	114	36,5
18401 473150		B DIN 86205	750										38,0

Subject to change !

© 1986