Körting Hannover AG

Körting Hannover AG • Bereich S • Postfach. 911363 • D-30433 Hannover • Telefon (0511) 2129 0 • Telefax 0511 2129 223 • E-mail : ST@koerting.de

Körting
Information

Performance Measurement of Steam Jet Ejectors

1.0 Measuring the vacuum

2.0 Measuring the suction stream

3.0 Measuring the evacuation time

4.0 Measuring of water and steam consumption

This information gives a short summary of the measuring instruments and measuring methods used in practice.

The complete rules for measuring temperatures, pressures and mass streams can be found in the brochures published by

HEAT EXCHANGE INSTITUTE (HEI / New York)
and
VDMA-Einheitsblätter 24294

General information

The performance of single- or multi-stage steam jet ejectors is characterized by the vacuum and suction stream.
One can demonstrate the performance of an ejector by measuring these figures.
This is applicable for continuous evacuation to maintain a specific vacuum in closed systems.
In order to determine the hogging performance on initial evacuation of a system, it is necessary -whilst taking the total volume of the system into account- to measure the time taken in relation to the realized vacuum.
For further proof of economic efficiency it is also necessary to measure motive steam and cooling water consumption.

1.0 Measuring the vacuum

The vacuum, i.e. the range of absolute pressure below atmospheric pressure, can be measured with mercury columns. The is why graduation of this pressure range into "mm Hg absolute" equals "Torr" was a common practice. The SI system uses "millibar".

If no direct-reading measuring instruments are available, the required mbar values must be determined by conversion. For this, the following figures applicable:

1	**ata (kg/cm^2)**	**= 735**	**Torr**
1,033	**ata**	**= 760**	**Torr**
1 bar = 1000 mbar		**= 750**	**Torr = 10^5 N/m^2**

Figure 1 shows how in a U-tube, atmospheric pressure "L" is compared with absolute pressure "p" prevailling in the evacuation vessel. The differential pressure "H" obtained in this way must be deducted from the respective air pressure "L":

L-H = p in Torr or mbar, resp.
L = atmospheric pressure

According to DIN 28400 the whole vacuum range is subdivided into the following grades:

Rough vacuum	**:**	**1000 upto**	**100**	**mbar**
Intermediate vacuum	**:**	**100 upto**	**1**	**mbar**
Fine vacuum	**:**	**1 upto**	**$10x10^{-4}$**	**mbar**
High vacuum	**:**	**$10x10^{-4}$ upto**	**$10x10^{-7}$**	**mbar**
Ultra-high vacuum	**:**	**below**	**$10x10^{-7}$**	**mbar**

The steam jet ejectors in question operate solely in the range of rough, intermediate and fine vacuum.

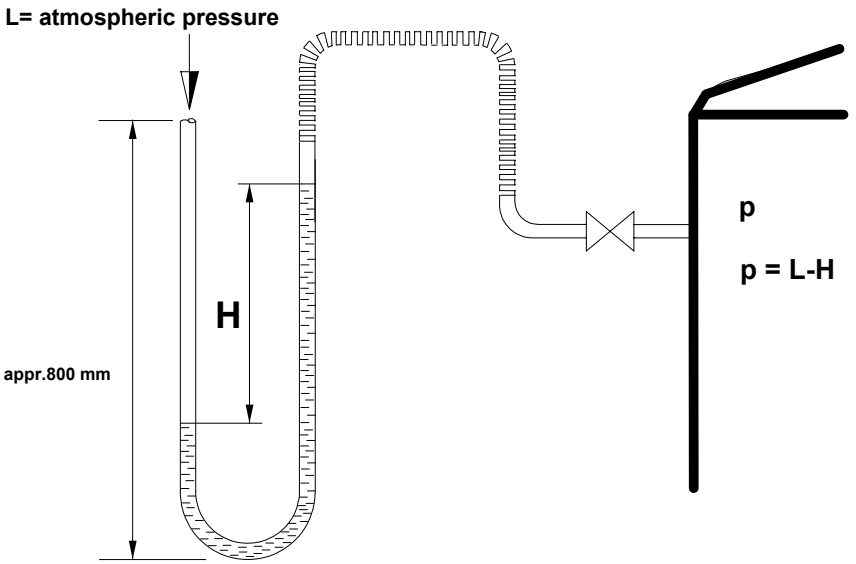

Figure 1: Shortened U-Tube

1.1 Measuring instruments

Bourdon-tubes pressure gauges and membrane instruments as well as liquid columns are used for measuring pruposes in the rough vacuum rang and in part, also in intermediate range.
The poor accuracy of the Bourdon-tube pressure gauge usually only allows pressure readings upto approx. 70 - 150 mbar whereas membrane manometers, being independent ofair pressure, are somewhat more sensitive and cover almost the whole range of rough and intermediate vacuum.

For this you will need a straight glass tube of approx. 800 mm length and a minimum diameter of 8 mm. The bottom end is submerged in an open tank filled with mercury
and the top is connected to the vacuum vessel. The level difference (= mm Hg vacuum) is ascertained and, with due consideration to barometric pressure, can be converted to Torr resp. mbar.

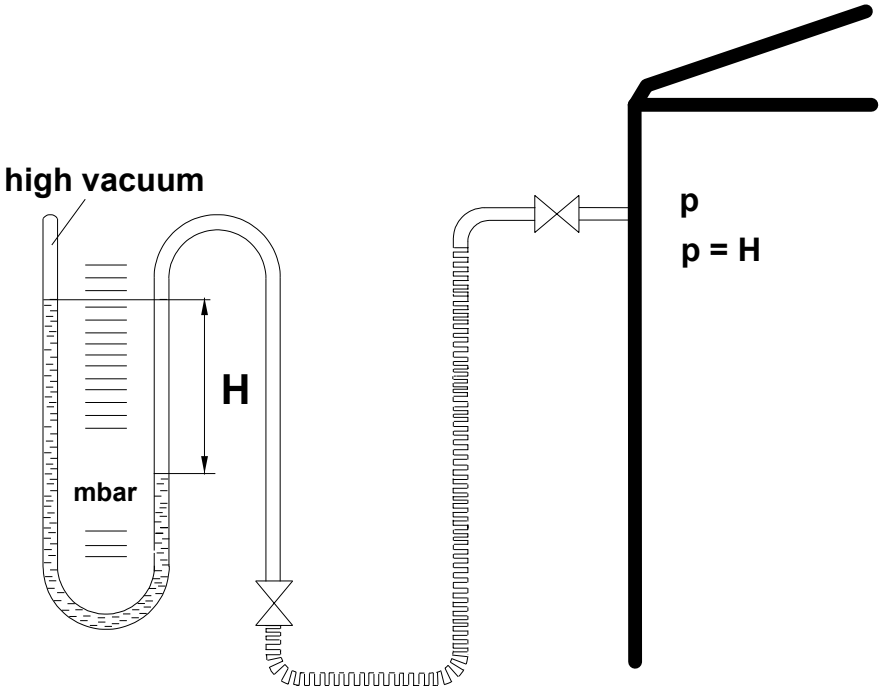

Figure 2: Shortened U-Tube (Bennert Manometer)

Mercury-filled shortened U-tubes closed at one end (Bennert manometer) are recommended for use in the intermediate vacuum range on account of their greater accuracy in readings. The pressure prevailing in the closed leg should be considerably below that of the pressure to be measured, so that the level difference can be read as absolute pressure in Torr or mbar (see Figure 2).

Often a mercury-filled curved and pivoted glass tube (ring balance manometer) is used for automatic measuring in the rough and intermediate vacuum ranges. The mercury-filled compression gauge (MC-Leod) has proved to be a reliable measuring instrument for the whole fine and intermediate vacuum range upto aprrox. 10 mbar.

The measuring results from a defined gas volume being compressed by an ascending mercury column. The level difference between the Hg level in the closed capillary tubes and the level as shown in an open top capillary gives the absolute partial pressure of the enclosed gases in mbar. Depending on the gauge types are various gradings, covering the whole measuring range between approx. 10 and 10^{-5} mbar(see Figure 3).

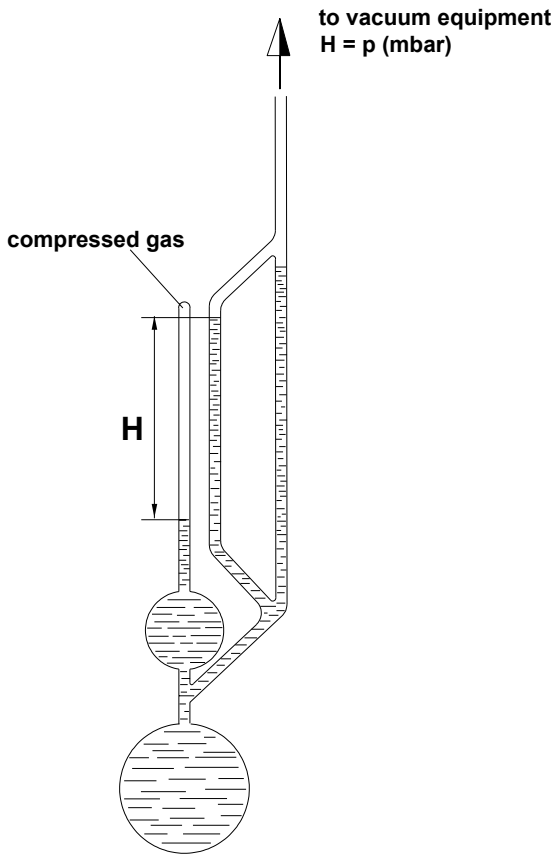

Figure 3: Compression gauge (MC-Leod)

A falsification of the measuring caused by condensation of vapour particles, can be avoid with the installation of cooling trap before the instrument, or by heating it. One disadvantage of this instrument lies in the discontinuous reading, but it is an eminantly suitable for calibrating other measuring instruments. There are simple, rotatable measuring instruments working acc. to this principle, but readings upto approx. 0,1 mbar, however, are less accurate.

Measuring instruments for continuous reading in the fine vacuum range are based on the measuring of the pressure-dependent physical properties as e.g. thermal conductivity (Pirani) or Ionization (Alphatron). These highly complicated instruments measure the total pressure in relationship to the gas type.

1.2 Connections for measuring

For vacuum measuring the connections should be located near the intake nozzle of the first ejector stage, since our guarantee is based on this point.
If the vacuum is measured in the reaction vessel alone, then one must take into account the pressure drop on entering the suction line and in the suction line itself.
The instrument pipe lines should be installed as short as possible and should have a drainage tap at the lowest point. The recommended materials to use are copper, thick-walled rubber or translucent plastic materials with a minimum inner diameter of 10 mm.
Particular attention must be paid to the fittings since even small leaks will cause high flow velocities in narrow pipes and can so falsify the measuring results. Further attention must be paid to the cleanliness of the pipes and the mercury. It is advisable to provide the instrument pipes with a shut-off device to prevent vacuum break-down occurring when loosening the connection.

2.0 Measuring the suction stream

Since the actual suction stream is composed of a variety of gases and vapours or of a mixture of the most diversified compositions and, in many cases, cannot be duplicated for performance measuring purposes, one has to determine approximate equivalent flows of air or vapour resp. and use these for testing the vacuum pump.

To many cases, to demonstrate the correct performance of a vacuum pump it is sufficient to carry out test with an equivalent stream of atmospheric air without regard to the condensable vapour portion.
On principle, a multi-stage vacuum pump can be tested in its property as a complete unit. However, it is also possible to test each individual stage whereby then the pressures prevailing on the suction and counter-pressure sides of each individual stage have to be detected.

2.1 Measuring methods

There are different methods of determining the continuous suction stream of gaseous fluid e.g., the measuring of pressure differences on throttles (nozzles or orifices) or the direct measurings according to the displacement and the float principle.
With regards to steam jet ejectors, one method has proved to be both simple and accuratem i.e., the measuring of the suction stream at major resonant speed (supersonic flow) by means of correspondingly dimensioned nozzles.

Atmospheric air or steam are passed into the vacuum chamber on the suction side through one or more of such nozzles, whereby the suction stream is determined only by the conditions before the nozzle and by the narrowest nozzle diameter.

In order to obtain the overcritical pressure from e.g. at atmospheric air before the nozzle, a pressure of at least
= 500 mbar must be present in the suction area preceding the ejector, which is usually the case even with single-stage steam jet ejectors.

If, apart from air and water vapour, other gases and vapours are to be evacuated at the installation site then -with due converted into air resp. steam equivalents (kg/h).
(see diagram Figure 4).

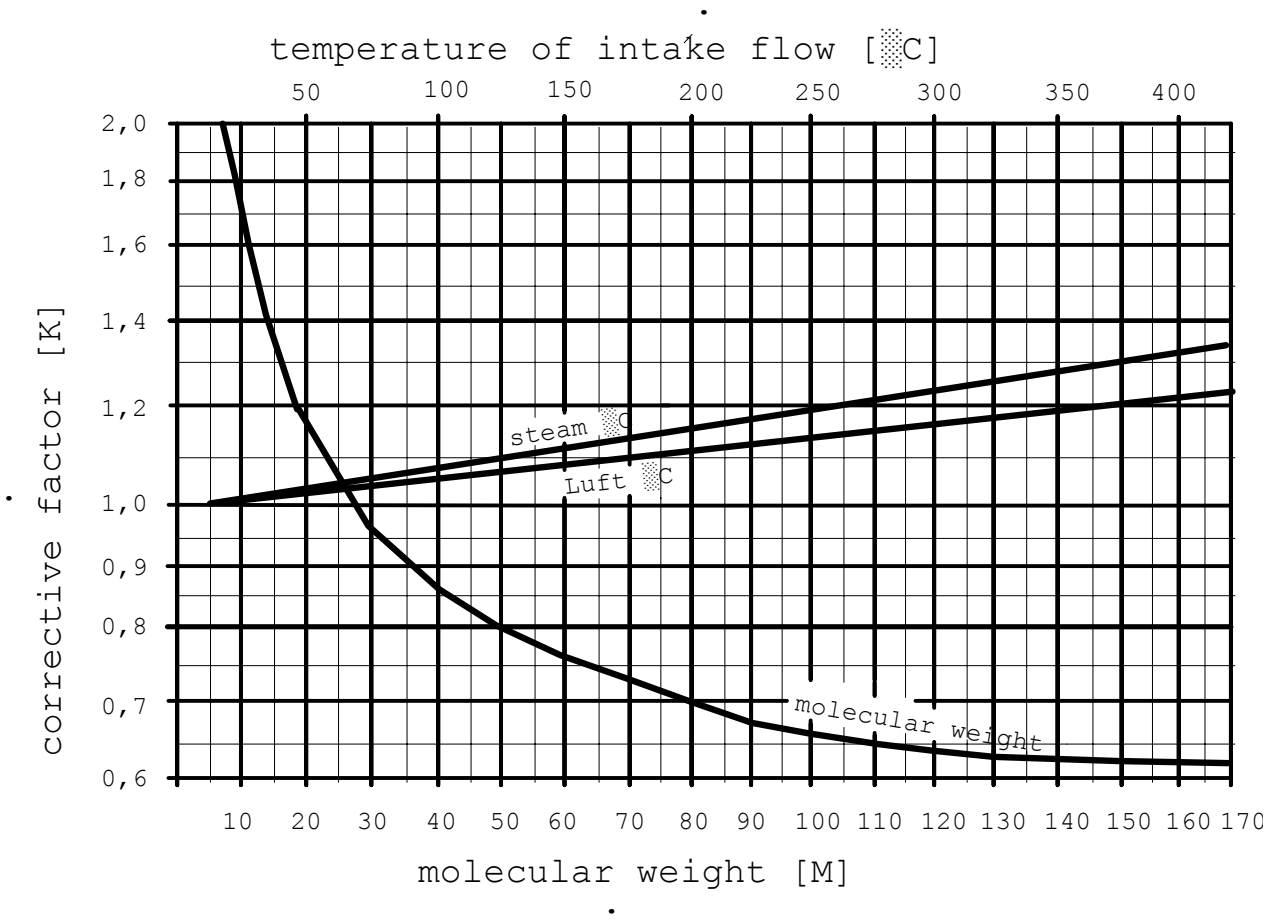

Figure 4: Corrective factor for suction streams are function of molecular weight and temperature

When measuring with atmospheric air, the influences of barometric level, humidity and temperature can -with adequate accuracy- be disregarded, so that in general one can allocate a determined air stream to a determined nozzle diameter. With water vapour however, one must of course take into account pressure, temperature and possibly humidity as well.

Example 1:	5	kg gas (M=82)	=	5 x 0.7	=	3.5	kg air equivalent (M=92)
Example 2:	20	kg water steam (M=18)	=	20 x 1.21	=	24.2	kg air equivalent (M=92)
Example 3:	100	kg water steam 150°C	=	100 x 1.1	=	110	kg water steam 25°C

2.2 Calibrated nozzles

The easiest way is to install the calibrated nozzles in the top hole provided in the head of the first ejector stage. For more exact results it is recommended to install the nozzles at a certain distance from the intake of the first ejector stage or on a special steadying chamber (see Figure 5)

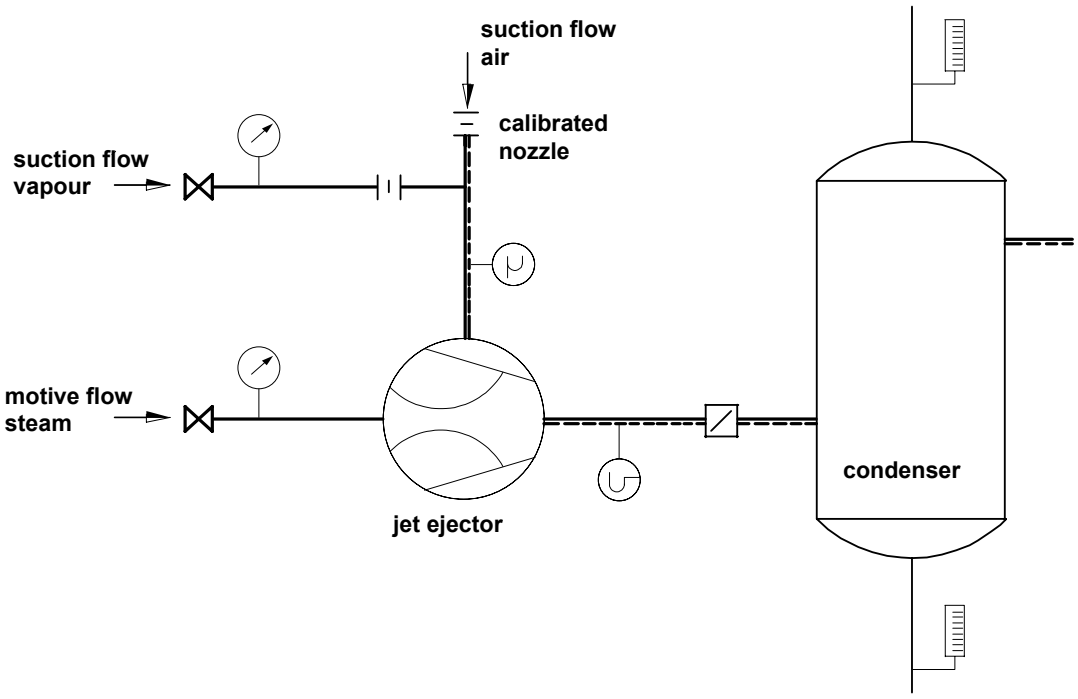

Figure 5: Configuration of calibrated nozzles

We keep a simplified form of these nozzles on stock i,e., for the following flows:

The smallest nozzle diameter "a" equals:

∅ 0.9 mm = 0.5 kg/h air
∅ 1.3 mm = 1.1 kg/h air
∅ 1.8 mm = 2.1 kg/h air
∅ 2.1 mm = 3.0 kg/h air
∅ 2.8 mm = 5.0 kg/h air
∅ 4.0 mm = 10.0 kg/h air
∅ 4.8 mm = 15.0 kg/h air

(see Figure 6)

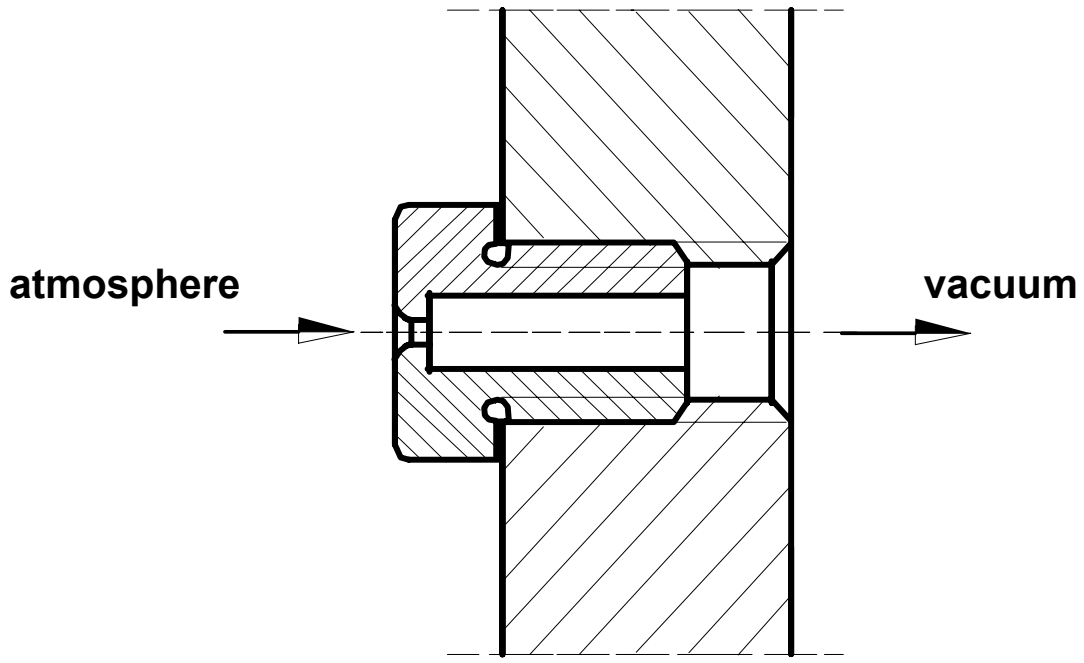

Figure 6: Calibrated nozzle for air

3.0 Measuring the evacuation time

The determination of the hogging performance of a single- or multi-stage steam jet ejector is done by measuring the attained within a definate period of time, provided the effective vacuum chamber or another vacuum-proof tank is available for this measurement. According to size, the leakage rate influences the starting time to a greater or lesser extent. The effects caused by leakage can, however, be disregarded in most cases if the starting time is relatively short (approximately 10 minutes).

In order to estimate the permanent suction capacity from the hogging performance at final vacuum of a single-stage steam ejector it is necessary to compute the total air amount to be evacuated from the system volume, the initial and the final pressure.
In relation to a time unit and multiplied by 0,5 this will give the approximate permanent suction performance based on the final vacuum.

Example: Volume of $5m^3$ in 10 minutes from 1013 to 240 mbar,
i.e. 5 * 1.2*(1-240/1013)= 4.6 kg of air shall be evacuated in
10 minutes, or approximated continuously out of 240 mbar.

4.0 Measuring of water and stream consumption

The determination of the steam consumption of each stage can be effected according to the same principle of major resonance speed in nozzle throughput as for the determination of the suction stream. Here the motive steam nozzle is the calibrated nozzle, whose smallest diameter may be taken from the technical documentation or it may be ascertained by measuring.

After determined the conditions before the nozzle it is very easy to calculate the steam flow from the diagram (see Körting Technical Data Sheet), or it can be calculated by known equations.

Knowing the quantity of each stage and taking the temperature of the cooling water into account, it is easy to calculate with sufficient accuracy the cooling water flow for the individual condensers.