Sonderdruck aus

Chemie-Technik

Hüthig GmbH, Heidelberg

Gas Jet Gas Ejectors for Industrial Processing

Operational characteristics and applications

Dipl.-Ing. H.-J. Schrank

Körting Hannover AG

Badenstedter Str. 56 • D-30453 Hannover • Tel. ++49 (0)511 2129-0 • Fax ++49(0)511 2129-223 • E-mail st@koerting.de

Jet pumps function without moving parts. They operate solely according to the laws of low. Many new fields of operation were opended up during the past two decades especially for the gas jet gas pumps. Nowadays they serve as mixing equipment for gas-gas mixtures in connection with natural gas and liquefied petroleum gas, as pre-pumps in vacuum generation equipment, and in liquid petroleum loading facilities for shifting the concentration of flammable waste gas mixtures to regions outside the explosive limits, as start-up device for non-selfpriming centrifugal pumps, etc.

Strahlpumpen arbeiten ohne bewegte Maschinenelemente. Sie werden ausschließlich nach den Gesetzen der Strömungslehre betrieben. In den vergangenen zwei Jahrzehnten konnten sich besonders die Gasstrahl-Gaspumpen viele neue Einsatzbereiche erschließen. Sie dienen heute als Mischaggregate für Gas-Gas-Mischungen im Zusammenhang mit Erdgas und Flüssiggas, in Vakuumerzeugungsanlagen als Vorschaltpumpen, in Verladeanlagen für flüssige Mineralöl-Produkte zur Verschiebung der Konzentrationen zündfähiger Abgasgemische in den Bereich außerhalb der Explosionsgrenzen, als Anfahrvorrichtung für nicht selbstansaugende Kreiselpumpen usw.

Gas Jet Gas Ejectors for Industrial Processing

Operational characteristics and applications

Dipl.-Ing. H.-J. Schrank

Function of Gas Jet Gas Ejectors

As shown in Fig. 1, the motive medium flow passes through the Gas Jet Gas Ejector as shown.
The suction medium is fed to the system after the motive nozzle (Laval nozzle) to mix with the motive medium.
The cross section of the ejector in the direction of flow changes such that pressure within the motive nozzle decreases, while speed increases. In the opposite sense , flow speed decreases in the discharge diffuser while pressure increases to equal back pressure at the jet ejector outlet.
The lowest static pressure will occur in the area between motive nozzle and discharge diffuser. This is where the suction flow is fed via the suction inlet to mix the high speed motive medium. Part of the high kinetic energy of the motive flow will be transferred to the suction flow inside the intake diffuser. Motive and suction flow passing the discharge diffuser are thus slowed down while pressure increases.
For Gas Jet Gas Ejectors, the ratio between discharge pressure (PD) and suction pressure (PS) represents the compression ratio.
As the critical pressure ratio is exceeded in the motive nozzle of the Gas Jet Gas Ejector, the motive flow will be accelerated to supersonic velocity. Both motive and suction flow, mixing at supersonic speed, will then be slowed down to about the velocity of sound before reaching the end of the inlet diffuser. The substantial pressure increase takes place within the diverging discharge diffuser (see the graph, Fig.2).

Jet Ejectors operating with evaporated liquefied gas as motive medium

Jet ejectors using evaporated liquefied gas (usually propane or butane gas or a mixture of both) operate by sucking either air from the atmosphere, or compressed air, before feeding the mixture into an existing gas network as required.
Such jet ejectors will only be used if natural gas or town gas is not available in sufficient quantities.
Thus operating the Gas Jet Gas Ejector will not be necessary unless normal supply is interrupted or peak load supply required.
The heating value of the mixture leaving the Jet Ejector is equivalent to that of the gas normally used in the gas network.

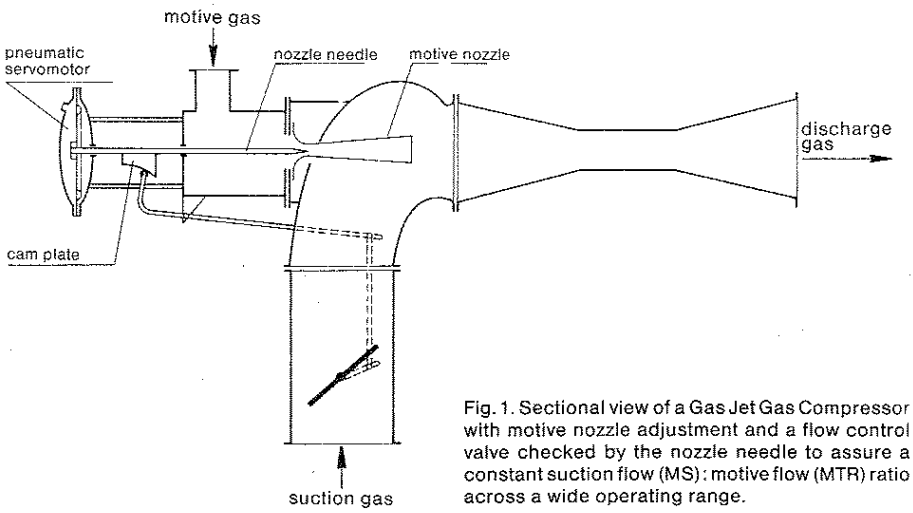

Fig. 1. Sectional view of a Gas Jet Gas Compressor with motive nozzle adjustment and a flow control valve checked by the nozzle needle to assure a constant suction flow (MS): motive flow (MTR) ratio across a wide operating range.

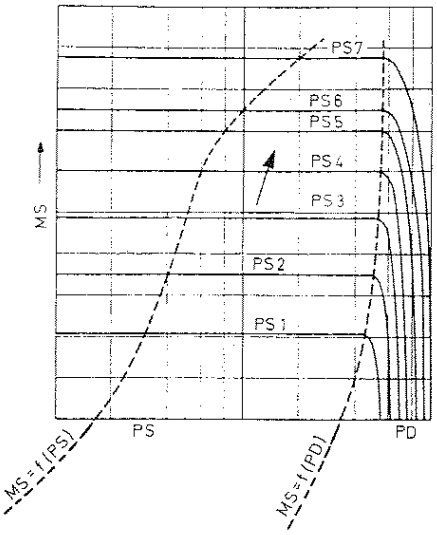

Fig. 2. characteristic curves of a Gas Jet Gas Compressor (MTR=constant), MTR=motive flow; MS=suction flow; PS=suction pressure; PD=discharge pressure; PS7 > PS6 > PS5 > PS4 etc.

Jet Ejectors using natural gas as motive medium

Jet ejectors operating with natural gas can suck evaporated liquefied gas (propane, butane, or a mixture of both) to increase the gas mixture's "Wobbe" factor.

Natural gas operated jet ejectors can be designed for various applications:

a) Gas Jet Gas Ejectors may be used, for instance, if two different types of natural gas with difference "Wobbe" factors are used within the same gas network. In such case, a Gas Jet Gas Ejector could mix the two gases to obtain a constant "Wobbe" factor.

b) Such Jet Ejectors are commonly used in connection with gas tanks storing different gas volumes. In view of the fact that gas works are generally under strict obligation to their gas suppliers with regard to guaranteed daily quantities and continuation of supply the possibility of storing natural gas at times of low consumption and to supply from stock if peak load service is required, becomes an essential issue. An interesting example of an installation of this type is in operation for 10 years in the municipal gas works in Munich (Fig. 3).

In order to propel the gas stored in a gas tank with a maximum capacity of 195000 m³ at an over pressure of 28 mbar to the required distribution pressure, two Gas Jet Gas Enjectors are installed capable of conveying the aspired gases to a pressure level which may be up to 115 mbar higher. Each is capable of delivering a maximum flow of about 50000 m³/h and thus handle the total supply, with the second one serving only as a standby unit.

By means of a control spindle, the motive flow can be regulated continuously between max. 124700 m³ and min. 2360 m³ to match the respective distribution requirements.

To avoid reflux from the pressure pipe into the gas tank if the unit is put out of operation or is operating in the low capacity range, a non return valve is incorporated in the suction pipe. The motive gas rquired for operating the unit is set to a constant absolute inlet pressure of 8 bar. A second control will turn off an electro magnetic valve mounted in the motive pipe, if the gas tank content is down to a minimum of 5000 m³.

c) Although Gas Jet Gas Ejectors mostly work in the low pressure range, i.e. directly within the gas network delivering heating gas to the individual consumer, jet ejectors are also suitable for handling jobs which require operation in the medium pressure range.

For instance, residual gas of atmospheric pressure occuring during natural gas processing can be compressed to absolute pressures between 5 and 7 bar. However, natural gas from a high pressure network is needed in such cases. The absolute motive pressure will normally be between 50 and 60 bar.

Fig. 3. Two Gas Jet Gas Compressors with motive nozzle adjustment (photo taken at Munich gas works).

d) Even in the field of natural gas exploitation Gas Jet Gas Ejectors have been used. The existence of different pressure levels is, of course, a basic requirement for such application.

The operation of Gas Jet Gas Ejectors at the natural gas fields of Bentheim may serve as an example for such application. Over several years, Gas Jet Gas Ejectors were modifying gas production to constant pressure overcoming long term pressure drop at low pressure drilling sites. The required motive gas was delivered from a gas store whose pressure level considerably exceeded the network pressure.

To adapt these jet ejectors to varying pressure ratios, motive nozzles and diffusers had to be replaced from time to time. The jet ejectors were therefore designed for an operation period of ten years. In the course of the ten years an estimated pressure drop from approx. 60 bar to about 45 bar in the low pressure probes (suction side of Gas Jet Gas Ejectors) was expected.

The discharge pressure of the Gas Jet Gas Ejectors was calculated to be 61 bar, kept about constant for the total period of time. At the same time, a pressure drop in the high pressure probes (motive side of Gas Jet Gas Ejectors) from about 108 to approx. 83 bar was calculated for the 10 year period.

In view of the fact that the size of the different flows as well as the pressure ratio did not allow the use of jet ejectors with nozzle needles, the expected total capacity was split in four jet ejector units handing 1/15 + 2/15 + 4/15 + 8/15 of the total capacity, thus allowing to compensate for fluctuating consumption in steps of about 6,7 %.

e) Continued gas leakage at the seal point of mechanically driven gas compressors led to the development of further interesting applications for Gas Jet Gas Compressors. In the field

of shafts passing through the spiral housing of turbo compressors, natural gas can be conveyed from a pressure level of about 3 bar to a pressure level of 16 bar by means of two-stage jet ejectors. The required motive gas is drawn from the pressure side of the turbo compressor and will normally be available at pressures between 55 bar and 65 bar.

Loading facilities for petrochemical products

Gas Jet Gas Ejectors, mainly operated with natural gas, are today used at loading facilities for liquid petroleum products. Loading facilities handling mainly petrol count among the most significant pollution emitters in refineries. Emissions of such hydro carbons not only represent a considerable source of pollution but might eventually build up flammable mixtures when in contact with atmospheric oxygen. Therefore the harbour of the UK-Wesseling is equipped with loading facilities for tank trucks as well as oil tankers, capable of rendering flammable mixtures inflammable right at the place of origin.
In the Gas Jet Gas Ejectors, sufficient natural gas is added to the mixture, consisting of hydro carbon vapours and atmospheric oxygen to make the exhaust gas mixture leaving the jet ejector over rich.
Due to the comparatively low motive flow of the natural gas, the achievable pressure increase within the Gas Jet Gas Ejector is limited. Therefore the jet ejectors have after coupled rotary piston compressors.
The heating gas obtained that way will be fed to the process furnace of the distillator unit for firing from below. The existing gasometer serves as an intermediate buffer as its comparatively large volume can compensate the HC fluctuations occuring in the course of the day. Terefore the burners of the process furnace can normally operate with a constant gas flow. In order to compensate for interruptions of the process furnace, a bottom flare is integrated in the total system and the gas mixture is conducted and burnt via this flare (Fig. 4).
The jet ejectors now used for such processing are either built in traditional style or in an advanced design as jet ejector units with an after coupled loop-type mixer serving to further homogenise the mixture.

Booster Sets for Vacuum Systems

A different range of applications for Gas Jet Gas Ejectors results from the fact that water ring vacuum pumps or even water jet vacuum ejectors are unable to produce suction pressures exceeding the vapour pressure of the operating water. If, for processing reasons, pressures below the vapour pressure of the operating water are required, gas jet vacuum ejectors are often incorporated ahead of such vacuum pumps without causing an increase of energy consumption. The resulting suction pressure increase will only affect the suction flow, which will decrease if a gas jet vacuum ejector is installed. Although atmospheric air normally serves as motive medium either gases or even vapours may be used as well (see Fig. 5).
Due to the fact that water ring vacuum pumps operate at comparatively low pressure levels, a sufficient pressure gradient is achieved if atmospheric air is used as motive medium for the intermediate gas jet vacuum ejectors. Combinations of water ring vacuum pumps and intermediate gas jet vacuum ejectors are found in large numbers in the chemical industry, in power plants and in different branches of the food processing industry.

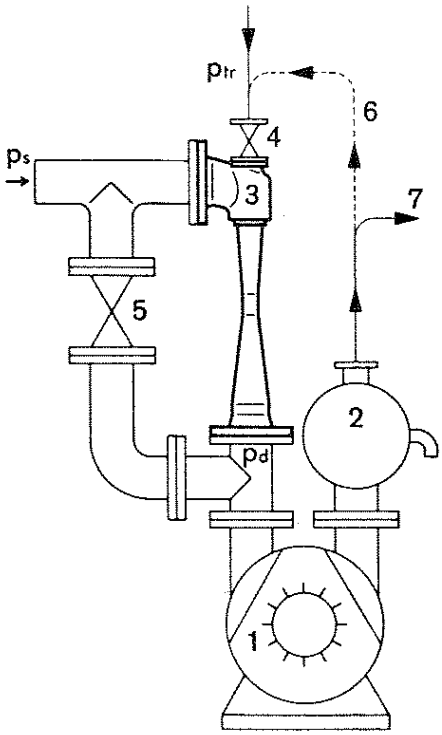

Fig. 5. Water ring vacuum pump with preceding air jet vacuum ejector. 1. Water ring pump (or other intermediate vacuum pumps) 2. Water separator 3. Air jet vacuum ejector with P_{tr}=1 bar motive pressure, p_s= suction pressure and p_d= back pressure = suction pressure of water ring pump 4. Start-up valve for motive air 5. Additional start-up valve for by-passing air jet ejector 6. Optional partial recovery of the air/steam mixture emitted by water separator to be used as motive medium 7. Air discharge.

Start-up device for non-self priming centrifugal pumps

Air operated Gas Jet Gas Ejectors are frequently used as start-up device for non-self priming centrifugal pumps.
For instance, ships can be equipped with combined low-energy non-selfpriming pumps and air-operated Gas Jet Gas Ejectors offering the advantage of simple systems and operating methods. The required amount of compressed air can normally be drawn from the vessel's own supply system. Jet ejectors are installed in the ship's pump room, from where they discharge directly to the atmosphere.

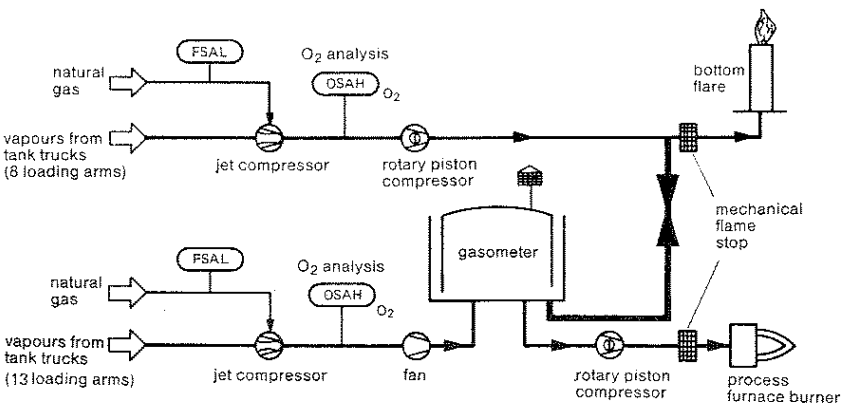

Fig.4. Waste gas decontamination system at stations for loading liquified petrochemical products into tank trucks and tankers.